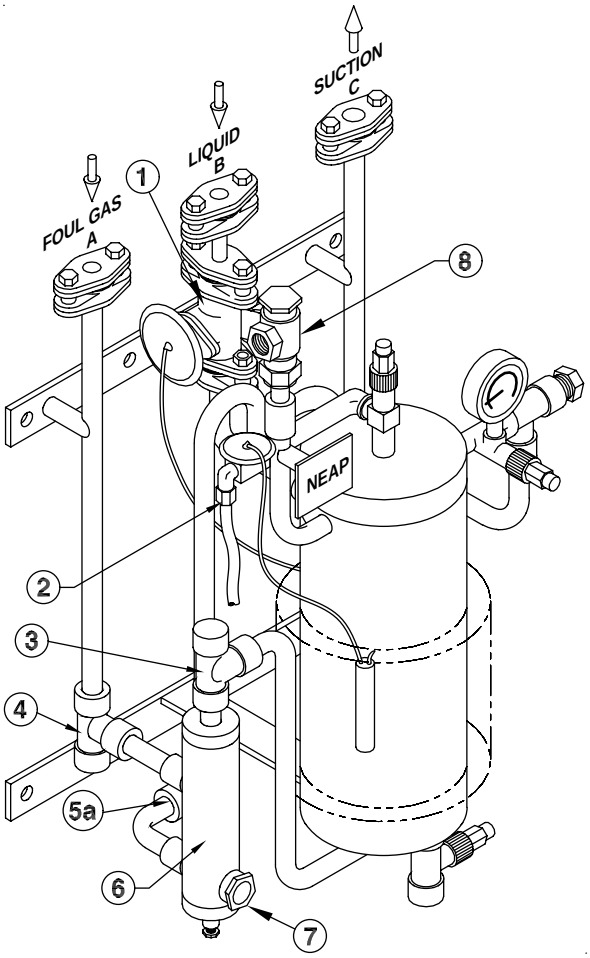

Left-Hand Side

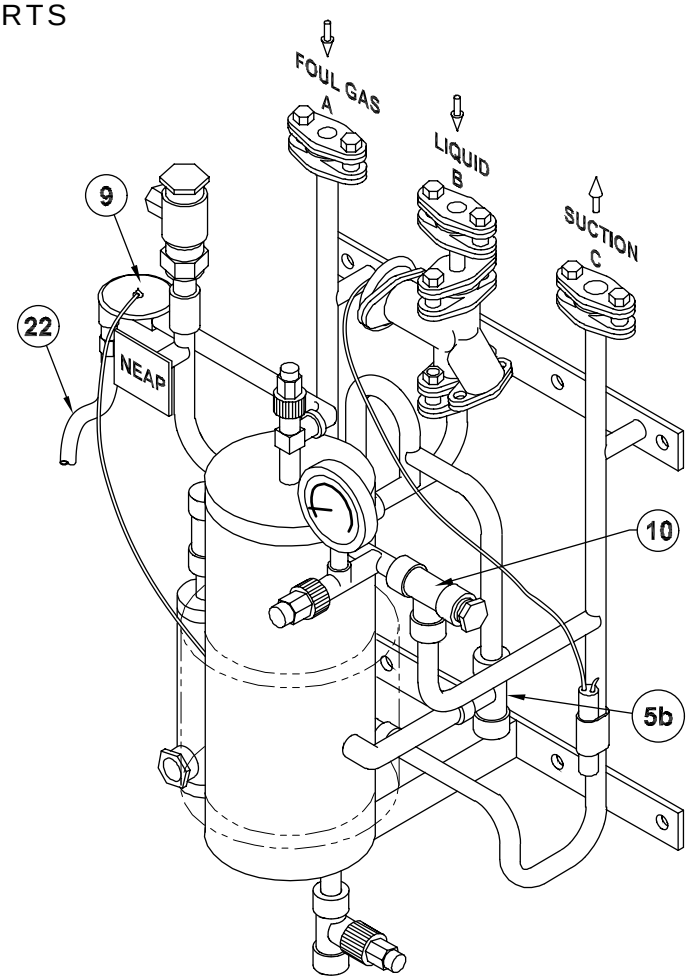

Right-Hand Side

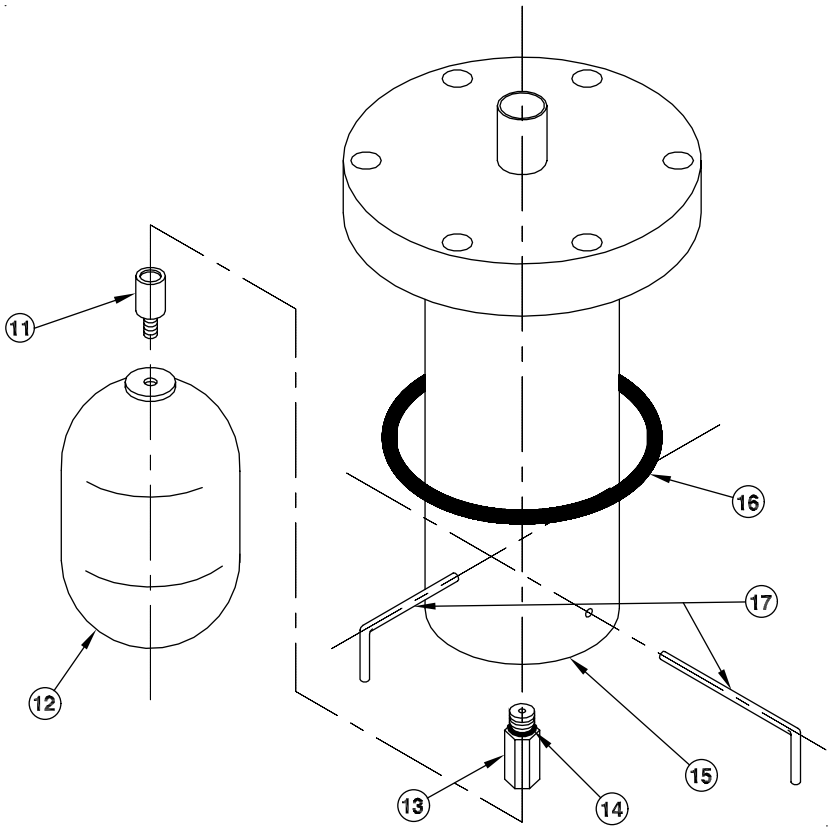

Purger Vessel Cover and Float Ball Assemblies